Experiment #4: Efficiency of a solar cell

Objective

How efficient is a solar cell at converting the sun's energy into power? How much power does a solar cell produce?

The objective of this experiment is to explore solar cells as renewable energy sources and test their efficiency in converting solar radiation to electrical power.

Theory

Solar Power

The sun produces 3.9×10^{26} watts of energy every second. Of that amount, 1,386 watts fall on a square meter of Earth's atmosphere and even less reaches Earth's surface. This energy can be used to generate electricity without producing pollution or dangerous wastes. Solar cells generate electrical power by converting solar radiation into direct current electricity. Currently solar cells generate a tiny fraction of the total global power-generating capacity from all sources. However, it is one of the fastest growing power-generation technologies in the world. Developing solar power is a critical part of sustainable energy policy, particularly as the costs and consequences of burning fossil fuels increase.

Figure 1: Solar cell

Solar cell uses the energy in a photon of sunlight to separate a positive charge from a negative charge. It collects those positive and negative charges on two different terminals so they can be used to do work in an electric circuit.

Solar cell efficiency

Solar cell efficiency is the ratio of the electrical output of a solar cell to the incident energy in the form of sunlight. The energy conversion efficiency (η) of a solar cell is the percentage of the solar energy to which the cell is exposed that is converted into electrical energy. This is calculated by dividing a cell's power output (in watts) at its maximum power point (P) by the input light (E, in W/m^2) and the surface area of the solar cell (A in m^2).

$$\eta = \frac{P}{E \times A} \times 100 \qquad (1)$$

Solar cell's power output is found by multiplying the cell's current and the cell's voltage:

$$P(W) = V \times I \qquad (2)$$

By convention, solar cell efficiencies are measured under standard test conditions (STC) unless stated otherwise. STC specifies a temperature of 25 °C and an irradiance of 1000 W/m^2 with an air mass 1.5 spectrum. These conditions correspond to a clear day with sunlight incident upon a sun-facing 37°-tilted surface with the sun at an angle of 41.81° above the horizon.

In this experiment, we are going to use a 100 W desk lamp to simulate the solar radiation. In an ideal case the irradiance of a 100 W light bulb at a distance of 0.15 m is around E= 350 W/m^2. We are going to use this value in our solar cell efficiency calculations.
First we should get familiar with the equipment we are going to use in this experiment.

Equipment

Solar cell
Variable Resistor
Digital Multimeter (DMM)
Electric motor
Desk lamp
Protractor
Vernier Caliper

Safety

Electric current safety
When unplugging a power cords, pull on the plug, not on the cable.
Keep fluids, chemicals, and beat away from instruments and circuits.
Report any damages to equipment, hazards, and potential hazards to the laboratory instructor.
Desk lamp safety
Do not use desk lamps in close proximity of paper, cloth or other combustible materials that can cause a fire hazard.
Lamps are very fragile. Do not drop, crush, bend or shake them.
Do not touch the bulb surface or inside reflectors with your bare hands. Oils from skin can lead to breakage or shorten the life of the lamp.
Never touch the lamp when it is on, or soon after it has been turned off, as it is hot and may cause serious burns.
Do not look directly at the operating lamp for any period of time; this may cause serious eye injury.
Always turn off the electrical power before inserting, removing, or cleaning the lamp.

Procedure

Part A: Finding the efficiency of a solar cell while driving an electric motor.

1- Measure the length and width of the solar cell with a vernier caliper and find its surface area.
2- Record the results in Table 1.

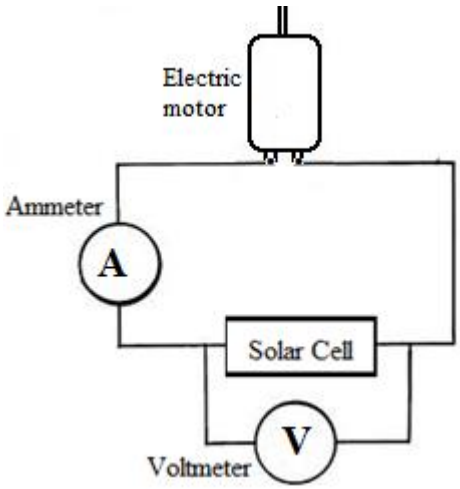

(a) (b)

Figure 2: (a) Solar cell efficiency test circuit diagram
(b) Experimental set up

3- Place the desk lamp on top of the solar panel.
4- Measure the distance from solar cell to the desk lamp with a ruler. Adjust the distance to 0.15 m, and turn on the desk lamp.
5- Connect the circuit as shown in the figure below. A solar cell, an electric motor and a DMM (for measuring current) is connected in series. A second DMM (for measuring voltage) is connected to the solar cell in parallel.
6- (Your Lab instructor will give you a short tutoring on how to set your DMMs correctly.)
7- Disconnect and connect the circuit 6 times, measure and record the Voltage-Current values in table 2.

Table 1

Length of the solar cell (mm)	Width of the solar cell (mm)	Length of the solar cell (m)	Width of the solar cell (m)	Area of the solar cell (m^2)

Table 2

Trial	V (V)	I (mA)	P (W)
#1			
#2			
#3			
#4			
#5			
#6			
			Pave=

Part B: Effect of colors (wavelengths) on the efficiency of solar cell

1- Place the solar cell on the table directly under the desk lamp and switch on the desk lamp.
2- Connect the solar cell with the electric motor and a DMM to measure current.
3- Record the solar cell current and observe the turn speed of the propeller of the electric motor.
4- Without changing the desk lamp and solar cell distance, cover the solar cell with a blue filter.
5- Record the cell current in table 3.
6- Mark the change in the turn speed of the propeller in table 3.
7- Change the filer color to green and red and repeat the steps 4-6.

Table 3

	Solar Cell Current (mA)	**Turn speed of the propeller compared to No filter**				
No filter		Faster	The same	Slower	Much slower	No turning
Blue filter						
Green filter						
Red filter						

Part C: Effect of angle on the efficiency of solar cell

1- Place the solar cell on the table directly under the desk lamp and switch on the desk lamp.
2- Connect the solar cell with the electric motor and a DMM to measure current.
3- Change the angle of the solar cell from 0 to 90. Measure the angle with a protractor.
4- Measure the solar cell current for given angles and observe the turn speed of the propeller of the electric motor. Record the results in table 4.

Table 4

	Solar Cell Current (mA)	**Turn speed of the propeller compared to No filter**				
0^0		Faster	The same	Slower	Much slower	No turning
30^0						
60^0						
90^0						

Data Analysis

1- Using equation 2 and the voltage-current values in table 2, calculate the power of the solar cell for each trial.
2- Calculate the average power the solar cell generated when connected to the electric motor.
3- Calculate the efficiency of the solar cell using equation 1.

Questions

1- You want to build a solar cell charger for your mobile phone battery. Your solar cell has the same efficiency rate as the one we tested in this experiment, and its size is 10 cm x 10 cm. What is the power you get from the solar cell?
2- How the efficiency of solar cell varies with the wavelength? Explain.
3- If you were to install a solar panel on your house, in what direction would you place it? Explain.

References

1- Michael J Morgan, Greg Jakovidis and Ian McLeod (1994) An experiment to measure the I-V characteristics of a silicon solar cell Department of Physics, Monash University, Clayton, Victoria 3168, Australia
2- Bloomfield, Louis A. How things work: the physics of everyday life, 4. Ed., 2008

Appendix: Equipment

Digital Multimeter (DMM)

When working with circuits you will often need to measure voltage and currents. The current is a serial quantity and measured by using an **ammeter**. The voltage is defined between two nodes and measured by connecting a **voltmeter** across those two nodes. Digital multimeter (DMM) allows us to measure both current and voltage in a circuit. In the procedure part, there is a circuit diagram, showing how to connect the DMM in our experiment circuit.

In the figure below, you can see the settings for a DMM to use is as a voltmeter (a) and an ammeter (b).

Figure 3(a): Voltmeter Setting

Figure 3(b): Ammeter Setting

Electric Motor

An electric motor is an electric machine that converts electrical energy into mechanical energy. In this experiment, we will use a toy electric motor and a propeller attached to it. We will connect the electric motor to the solar cell and rate the efficiency of solar cell with observing the turn speed of the propeller.

Figure 4: An Electric motor

Vernier Caliper

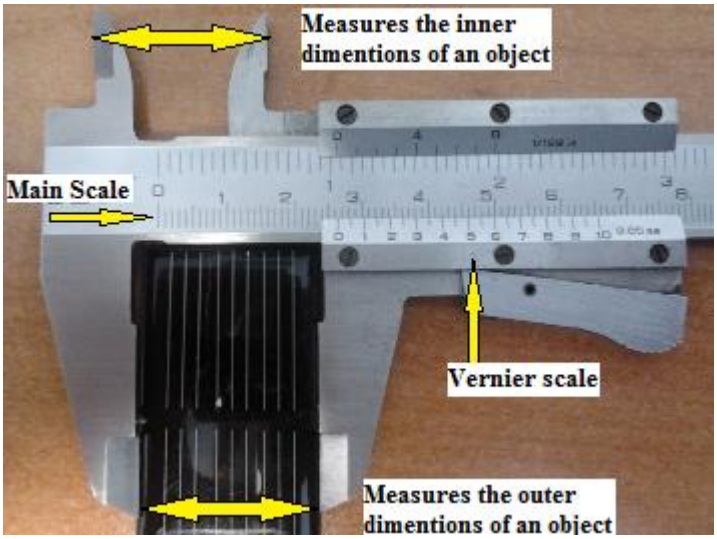

Figure 5: Vernier caliper

Note the zero graduation marks (tick marks) on each of the scales (vernier and main).
We will always use metric units; ignore British units (inches) on each of the scales (the top of this caliper).
The smallest division of the vernier scale is 0.05 mm. Therefore it allows a measurement with the uncertainty of ± 0.025 mm.

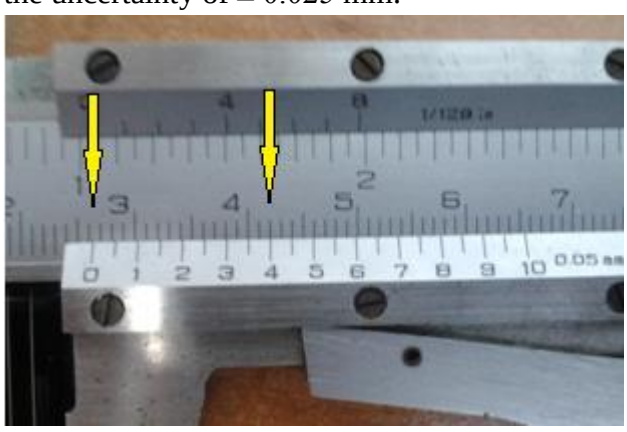

Figure 6: Reading Vernier scale

An outer dimention measurement is shown in the figure. Note that the zero tick mark of the vernier scale has passed the 2.6 position (2.6 cm=26 mm), but not the 2.7 position of the main scale.
To obtain the remaining values, determine the first tick mark (from left to right) on the vernier scale that is aligned with a tick mark on the main scale.
In this case, 4 is the first alignment. The final measurement reading of the vernier caliper is (2.640 ± 0.0025cm ; 26.4 ± 0.025mm).